AbleMed® | 可能医疗

Medical equipment connections

Catalog

ISO 13485 certified

ABLE MEDICAL(DONGGUAN)CO.,LTD

Our Features

High efficiency : 18 years of processing experience, provide reasonable suggestions, let you less detours.

High gloss, cleanliness. No edge burr. Make your medical devices safer.

High requirements : all materials are purchased through formal channels and provided with material proof.

Our Cooperative Customers

Our Certification

Medical equipment connections

We have 18⁺years of experience in the machining of precision medical components and specialise in the supply of small medical connectors (Straight, Elbow, T-ties, Y-ties). Quicken connector ,Luer taper, Right connector, Threaded connector and Nuts.

We have a wide range of products for many medical devices and support customised connectors in different materials and sizes.

100⁺sets of existing moulds,while supporting non-standard custom connectors and fasteners.

There will be no air leakage and liquid leakage support multi-specie.

Small batch processing orders

Introduction:

- Material
- Application
- Feature

Corrosion-resistant PEI, PEEK, ETFE, corrosion and acid- and alkali-resistant PEEK, PPSu, common POM wear-resistant and durable stainless steel of various standards, etc.

Medical equipment connections, fasteners, medical fluids , gas connections , surgical imaging equipment, laboratory equipment, etc.

More than 100 sets of existing moulds, saving on moulding costs and enabling fast production moulds with an accuracy of 0.001 mm; using materials in accordance with Rohs . Reach10993 material, committed to providing 100% qualified parts.

PEI Tee -connectors

PEEK Connectors

ETFE Connectors

Male thread to stab series----All-in-one

"I" exterior dimensions

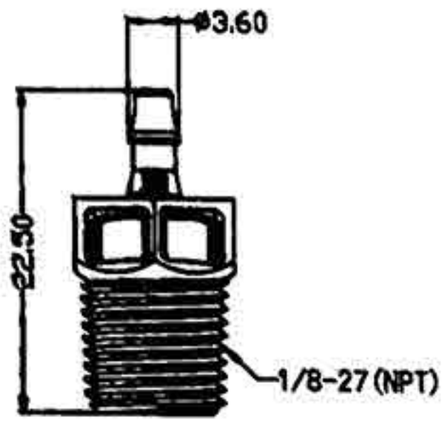

OP1827-360

UNIT:mm

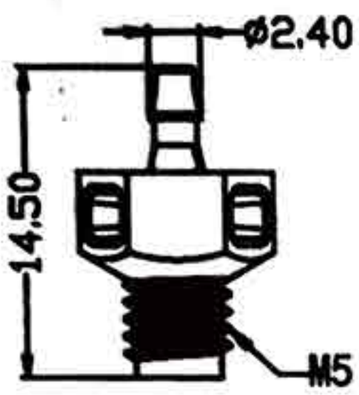

OPM5-240

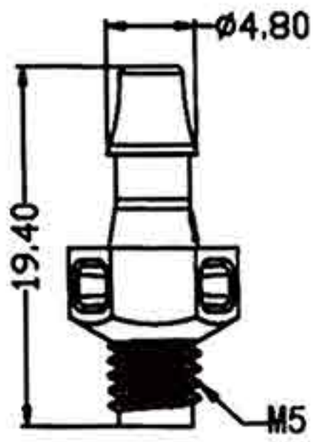

OPM5-480

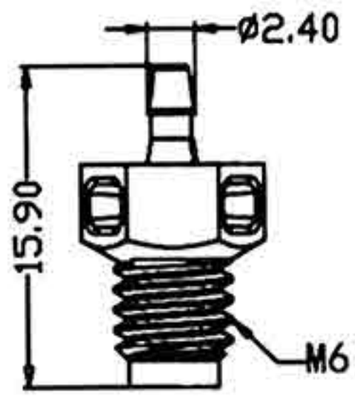

OPM6-240

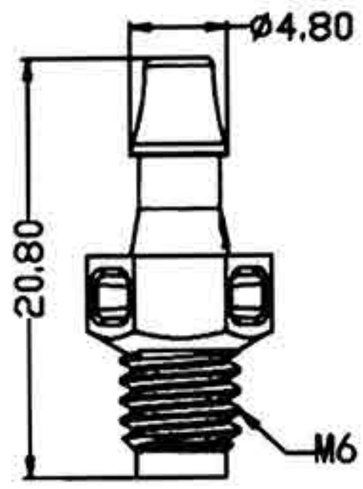

OPM6-480

Specification sheets

P/N	TYPE	EXTERNAL THREAD SPECIFICATIONS	MATERIAL	COLOR	INENER DIAMETERS	MPQ	INSTALLATION METHOD
OPM5-240	male thread to stab	M5	PP	true colors	1/16" or 1.6mm	10/PCS	manual
OPM5-480	male thread to stab	M5	PP	true colors	1/8" or 3.2mm	10/PCS	manual
OPM6-240	male thread to stab	M6	PP	true colors	1/16" or 1.6mm	10/PCS	manual
OPM6-480	male thread to stab	M6	PP	true colors	1/8" or 3.2mm	10/PCS	manual
OP1827-360	male thread to stab	1/8-27(NPT)	PA	true colors	2.4mm	10/PCS	manual

* The depth of the threaded bottom hole may affect the assembly effect, individual products are recommended to be used with raw material tape, consult your technical representative for details.

"L" exterior dimensions

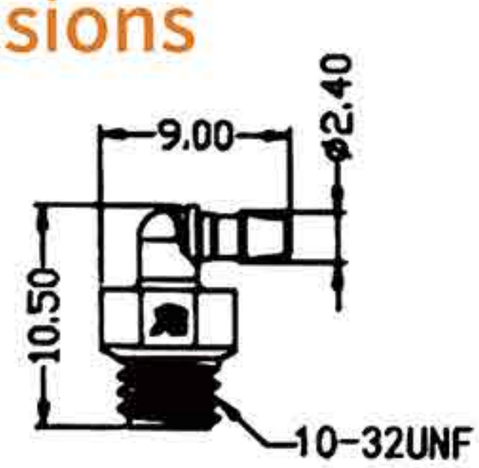

OL1032-240

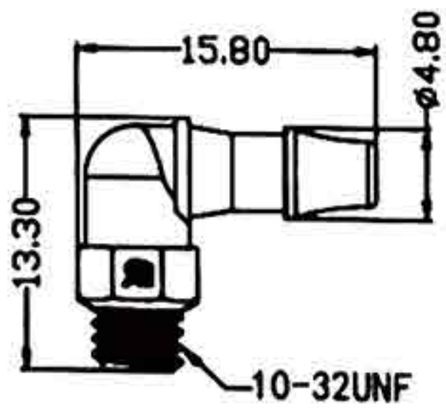

OL1032-480

Specification sheets

P/N	TYPE	EXTERNAL THREAD SPECIFICATIONS	MATERIAL	COLOR	INENER DIAMETERS	MPQ	INSTALLATION METHOD
OL1032-240	male thread to stab	10-32UNF	PP	true colors	1/16" or 1.6mm	10/PCS	manual
OL1032-480	male thread to stab	10-32UNF	PP	true colors	1/8" or 3.2mm	10/PCS	manual

* The depth of the threaded bottom hole may affect the assembly effect, individual products are recommended to be used with raw material tape, consult your technical representative for details.

Barbed Joint Series - Two Way

External dimensions

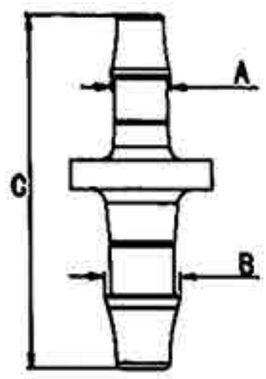

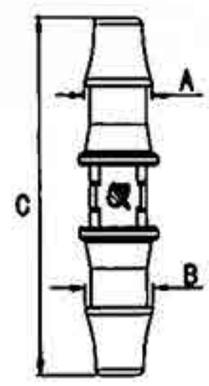

UNIT:mm

Specification sheets

P/N	TYPE	MATERIAL	COLOR	A TUBE INNER DIAMETER	B TUBE INNER DIAMETER	C	MPQ	INSTALLATION METHOD
SN216-155	straight through barbed	PP	true colors	1.6mm	1.6mm	15.7mm	10/PCS	manual
SN216-156	straight through barbed	PA	white	1.6mm	1.6mm	15.7mm	10/PCS	manual
SN224-165	straight through barbed	PEI	amber	2.4mm	2.4mm	16.6mm	10/PCS	manual
SN1624-165	straight through barbed	PP	true colors	1.6mm	2.4mm	16.5mm	10/PCS	manual
SN1624-166	straight through barbed	PA	white	1.6mm	2.4mm	16.5mm	10/PCS	manual
SN1632-200	straight through barbed	PP	true colors	1.6mm	3.2mm	20mm	10/PCS	manual
SN1632-201	straight through barbed	PA	white	1.6mm	3.2mm	20mm	10/PCS	manual
SN1632-203	straight through barbed	PEI	amber	1.6mm	3.2mm	17mm	10/PCS	manual
SN2432-178	straight through barbed	PP	true colors	3.2mm	2.4mm	17.8mm	10/PCS	manual
SN2432-179	straight through barbed	PA	white	3.2mm	2.4mm	17.8mm	10/PCS	manual
SN2432-240	straight through barbed	PEI	amber	3.2mm	2.4mm	20mm	10/PCS	manual
SN232-250	straight through barbed	PP	true colors	3.2mm	3.2mm	25mm	10/PCS	manual
SN232-251	straight through barbed	PA	white	3.2mm	3.2mm	25mm	10/PCS	manual
SN4080-436	straight through barbed	PP	true colors	4.0mm	8.0mm	43.6mm	10/PCS	manual
SN4080-437	straight through barbed	PA	white	4.0mm	8.0mm	43.6mm	10/PCS	manual
SN2440-216	straight through barbed	PP	true colors	2.4mm	4.0mm	21.6mm	10/PCS	manual
SN2440-217	straight through barbed	PA	white	2.4mm	4.0mm	21.6mm	10/PCS	manual
SN3240-241	straight through barbed	PP	true colors	3.2mm	4.0mm	24.1mm	10/PCS	manual
SN3240-242	straight through barbed	PA	white	3.2mm	4.0mm	24.1mm	10/PCS	manual
SN3264-277	straight through barbed	PP	true colors	3.2mm	6.4mm	27.7mm	10/PCS	manual
SN3264-278	straight through barbed	PA	white	3.2mm	6.4mm	27.7mm	10/PCS	manual

External dimensions

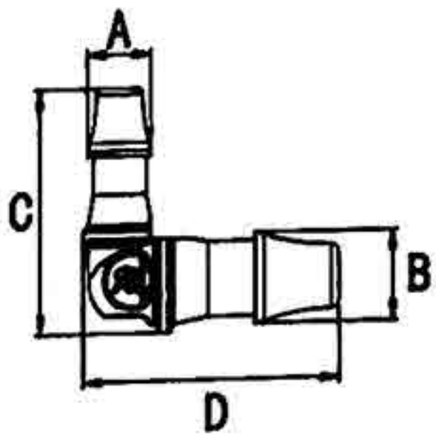

Specification sheets

P/N	TYPE	MATERIAL	COLOR	A TUBE INNER DIAMETER	B TUBE INNER DIAMETER	C/D	MPQ	INSTALLATION METHOD
SL224-155	L-shaped barbs	PP	true colors	2.4mm	2.4mm	11.5mm	10/PCS	manual
SL224-156	L-shaped barbs	PA	white	2.4mm	2.4mm	11.5mm	10/PCS	manual
SL224-104	L-shaped barbs	PEI	amber	2.4mm	2.4mm	10.4mm	10/PCS	manual
SL2432-145	L-shaped barbs	PP	true colors	2.4mm	3.2mm	13/14.5	10/PCS	manual
SL2432-146	L-shaped barbs	PA	white	2.4mm	3.2mm	13/14.5	10/PCS	manual

*Please refer to the measured data as these are recommended values, as they may vary depending on the material and technical hardness of the pipe used at the customer's end.

Inverted Tapered Nuts - Standard Series

Standard external dimensions

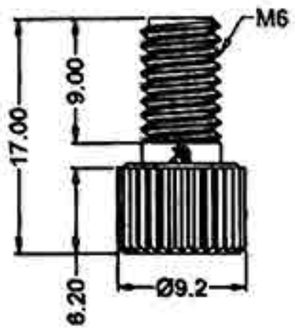

DZM6-521 DZM6-522
DZM6-523 DZM6-524

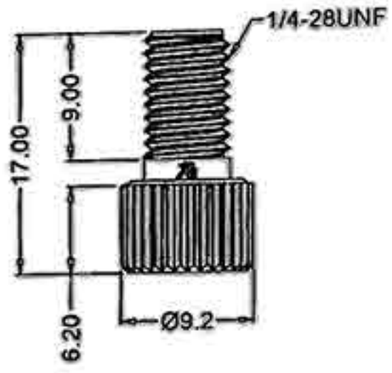

DZ1428-512 DZ1428-513
DZ1428-514 DZ1428-515

UNIT: mm

Standard specification sheet

P/N	TYPE	THREAD SIZE	MATERIAL	COLOR	OUTER DIAMETER OF PIPE	MPQ	INSTALLATION METHOD	
DZM6-521	standard type	M6	PP	blue	1/16" or 1.6mm	10/PCS	manual	torque batch
DZM6-522	standard type	M6	POM	black	1/16" or 1.6mm	10/PCS	manual	torque batch
DZM6-523	standard type	M6	PP	gray	1.8、2.0、2.5、3.0、3.2mm	10/PCS	manual	torque batch
DZM6-524	standard type	M6	POM	white	1.8、2.0、2.5、3.0、3.2mm	10/PCS	manual	torque batch
DZ1428-512	standard type	1/4-28UNF	PP	green	1/16" or 1.6mm	10/PCS	manual	torque batch
DZ1428-513	standard type	1/4-28UNF	POM	black	1/16" or 1.6mm	10/PCS	manual	torque batch
DZ1428-514	standard type	1/4-28UNF	PP	gray	1.8、2.0、2.5、3.0、3.2mm	10/PCS	manual	torque batch
DZ1428-515	standard type	1/4-28UNF	POM	white	1.8、2.0、2.5、3.0、3.2mm	10/PCS	manual	torque batch

Torque limiting type dimensional drawing

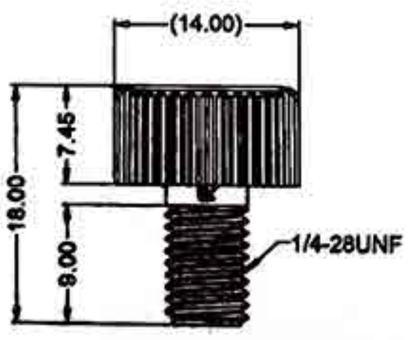

KK1428-215 KK1428-216
KK1428-315 KK1428-316

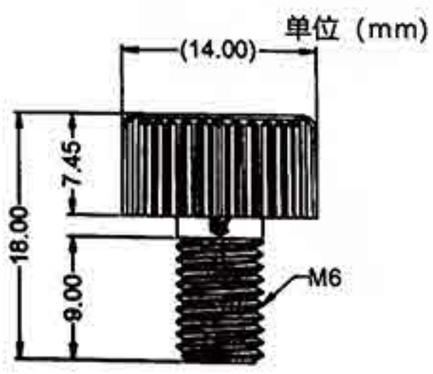

KKM6-215 KKM6-216
KKM6-315 KKM6-316

UNIT: mm

Torque limiting type specification sheet

P/N	TYPE	THREAD SIZE	MATERIAL	CAP COLOUR	THREAD COLOUR	OUTER DIAMETER OF PIPE	MPQ	TORQUE
KK1428-215	standard type	1/4-28UNF	POM+PP	POM black	PP true colors	1/16"1.8mm,2.0mm	10/PCS	0.15~0.2N-M
KK1428-216	standard type	1/4-28UNF	POM+PP	POM black	PP black	2.5mm,3.0mm,1/8"	10/PCS	0.15~0.2N-M
KK1428-315	standard type	1/4-28UNF	POM+PP	POM red	PP dark grey	1/16",1.8mm,2.0mm	10/PCS	0.2~0.25NM
KK1428-316	standard type	1/4-28UNF	POM+PP	POM red	PP black	2.5mm,3.0mm1/8"	10/PCS	0.2~0.25NM
KKM6-215	standard type	M6	POM+PP	POM black	PP dark grey	1/16"1.8mm,2.0mm	10/PCS	0.15~0.2NM
KKM6-216	standard type	M6	POM+PP	POM black	PP black	2.5mm,3.0mm,1/8"	10/PCS	0.15~0.2NM
KKM6-315	standard type	M6	POM+PP	POM red	PP dark grey	1/16"1.8mm,2.0mm	10/PCS	0.2~0.25NM
KKM6-316	standard type	M6	POM+PP	POM red	PP black	2.5mm,3.0mm,1/8"	10/PCS	0.2~0.25NM

*Recommended threaded hole bottom 9mm, for shorter threaded hole bottom designs please consult technical representative.
*Please refer to the measured data as these are recommended values, as they may vary depending on the material and technical hardness of the pipe used at the customer's end.

Turned nuts - standard series

Standard external dimensions

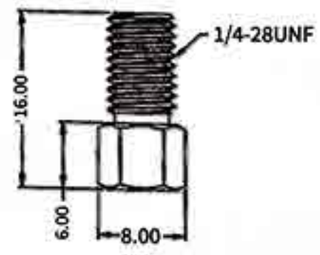

HN1428-170 HN1428-215
HN1428-265 HN1428-324
HN1428-340

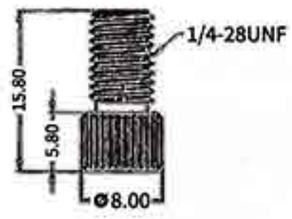

HN1428-325

UNIT: mm

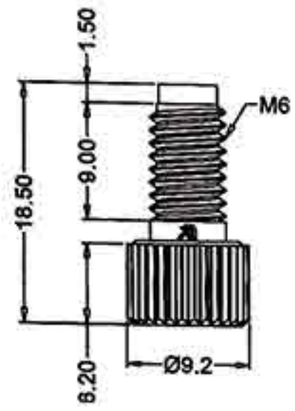

FFM6-320~FFM6-330

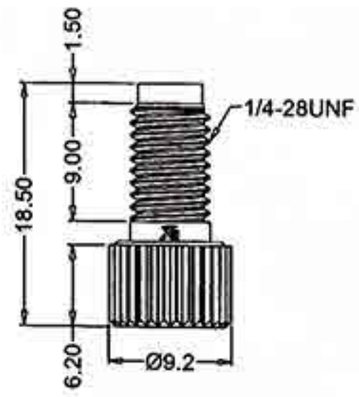

FF1428-330~FF1428-310

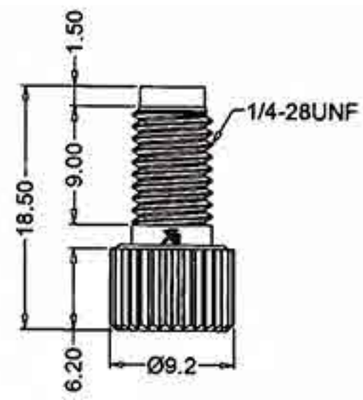

FF1428-216 FF1428-265

Standard specification sheet

P/N	TYPE	THREAD SIZE	MATERIAL	COLO	OUTER DIAMETER OF PIPE	MPQ	INSTALLATIONG METHOD	
FFM6-320	standard type	M6	PP	black	3.0mm or 3.2mm	10/PCS	manual	torque batch
FFM6-321	standard type	M6	PEEK	true olors	1/16" or 1.6mm	10/PCS	manual	torque batch
FFM6-322	standard type	M6	PP	black	1/1 or 1.6mm	10/PCS	manual	torque batch
FFM6-323	standard type	M6	PEEK	true olors	0.080" or 2mm	10/PCS	manual	torque batch
FFM6-324	standard type	M6	PP	blue	0.080" or 2mm	10/PCS	manual	torque batch
FFM6-325	standard type	M6	PEEK	true olors	2.5mm	10/PCS	manual	torque batch
FFM6-326	standard type	M6	PP	dark grey	2.5mm	10/PCS	manual	torque batch
FFM6-329	standard type	M6	PEEK	true olors	3.0mm or 3.2mm	10/PCS	manual	torque batch
FFM6-330	standard type	M6	PPS	true olors	3.0mm or 3.2mm	10/PCS	manual	torque batch
FF1428-215	standard type	1/4-28UNF	PEEK	true olors	0.080" or 2mm	10/PCS	manual	torque batch
FF1428-265	standard type	1/4-28UNF	PEEK	true olors	2.5mm	10/PCS	manual	torque batch
FF1428-300	standard type	1/4-28UNF	PP	dark grey	3.0mm or 3.2mm	10/PCS	manual	torque batch
FF1428-301	standard type	1/4-28UNF	PEEK	true olors	1/16" or 1.6mm	10/PCS	manual	torque batch
FF1428-302	standard type	1/4-28UNF	PP	dark grey	1/16" or 1.6mm	10/PCS	manual	torque batch
FF1428-303	standard type	1/4-28UNF	PEEK	true olors	0.080" or 2mm	10/PCS	manual	torque batch
FF1428-304	standard type	1/4-28UNF	PP	blue	0.080" or 2mm	10/PCS	manual	torque batch
FF1428-305	standard type	1/4-28UNF	PEEK	true olors	2.5mm	10/PCS	manual	torque batch
FF1428-306	standard type	1/4-28UNF	PP	black	2.5mm	10/PCS	manual	torque batch
FF1428-309	standard type	1/4-28UNF	PEEK	true olors	3.0mm or 3.2mm	10/PCS	manual	torque batch
FF1428-310	standard type	1/4-28UNF	PPS	true olors	3.0mm or 3.2mm	10/PCS	manual	torque batch
HN1428-170	standard type	1/4-28UNF	SUS316	true olors	1/16" or 1.6mm	10/PCS	manual	torque batch
HN1428-215	standard type	1/4-28UNF	SUS316	true olors	0.080" or 2mm	10/PCS	manual	torque batch
HN1428-265	standard type	1/4-28UNF	SUS316	true olors	2.5mm	10/PCS	manual	torque batch
HN1428-324	standard type	1/4-28UNF	SUS316	true olors	3mm	10/PCS	manual	torque batch
HN1428-325	standard type	1/4-28UNF	SUS316	true olors	3mm	10/PCS	manual	torque batch
HN1428-340	standard type	1/4-28UNF	SUS316	true olors	3.0mm or 3.2mm	10/PCS	manual	torque batch

Snap ring nuts - click type series

Production Introduction

A unique solution for hand tightening nuts - the torque limiting nut (commonly known as the "click nut") which allows the resistance of the nut to increase as the fitting is tightened until the correct torque range is reached, at which point the nut will make a "click" sound. This allows the user to hand tighten the nut without the use of additional torsion tools, and the sound alone will ensure that the fitting is correctly fitted and securely sealed. This is particularly suitable for applications where space is at a premium and torsional consistency is critical.

This nut can be unscrewed and reused:

1. The nut selection + points is simple, according to the torque range you need and the corresponding pipe outer diameter can be.
2. ..Available in POM+PP and other materials.
3. 1/4-28UNF and M6 threads are available, other thread options are supported.
4. The following selection table applies to the snap ring coupling range. Please ask technician for more Information.

Torque limiting type dimensional drawing

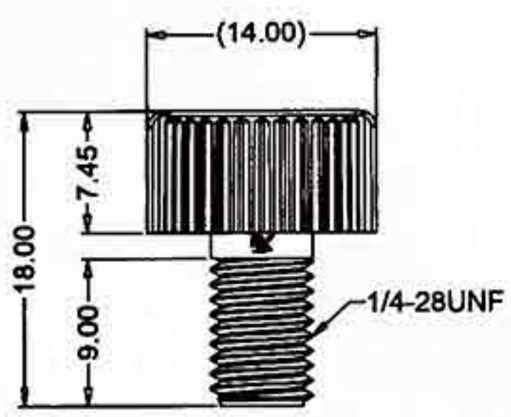

KK1428-217
KK1428-218
KK1428-317
KK1428-318

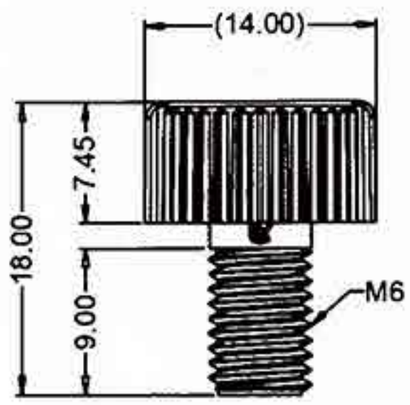

KKM6-217
KKM6-218
KKM6-317
KKM6-318

UNIT: mm

Torque limiting type specification sheet

P/N	TYPE	THREAD SIZE	MATERIAL	CAP COLOUR	THREAD COLOUR	OUTER DIAMETER OF PIPE	MPQ	TORQUE
KK1428-217	standard type	1/4-28UNF	POM+PP	POM black	PP dark grey	1/16"1.8mm,2.0mm	10/PCS	0.15~0.2N-M
KK1428-218	standard type	1/4-28UNF	POM+PP	POM black	PP black	2.5mm,3.0mm,1/8"	10/PCS	0.15~0.2N-M
KK1428-317	standard type	1/4-28UNF	POM+PP	POM red	PP dark grey	1/16",1.8mm,2.0mm	10/PCS	0.2~0.25NM
KK1428-318	standard type	1/4-28UNF	POM+PP	POM red	PP black	2.5mm,3.0mm1/8"	10/PCS	0.2~0.25NM
KKM6-217	standard type	M6	POM+PP	POM black	PP dark grey	1/16"1.8mm,2.0mm	10/PCS	0.15~0.2NM
KKM6-218	standard type	M6	POM+PP	POM black	PP black	2.5mm,3.0mm,1/8"	10/PCS	0.15~0.2NM
KKM6-317	standard type	M6	POM+PP	POM red	PP dark grey	1/16"1.8mm,2.0mm	10/PCS	0.2~0.25NM
KKM6-318	standard type	M6	POM+PP	POM red	PP black	2.5mm,3.0mm,1/8"	10/PCS	0.2~0.25NM

*Recommended threaded hole bottom 9mm, for shorter threaded hole bottom designs please consult technical representative
*Please refer to the measured data as the torque may vary depending on the material and technical hardness of the pipe used at the customer's end.

Snap Ring Nuts - Extension Series

Exterior dimensional drawing of the extended model

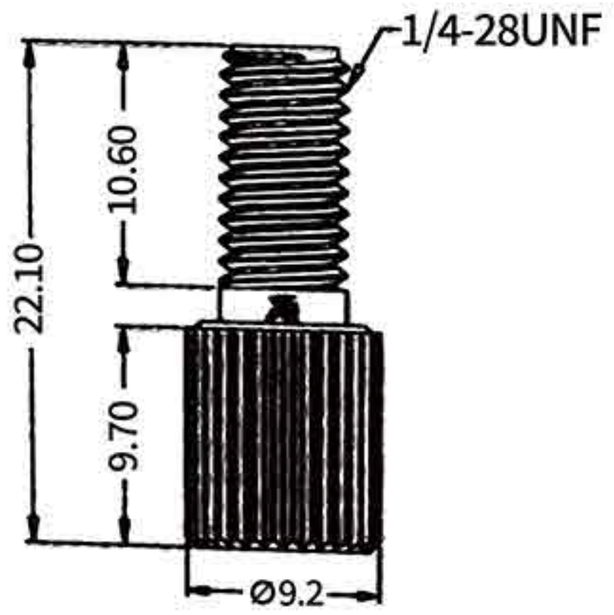

NT1428-661 NT1428-662
NT1428-663 NT1428-664
NT1428-665 NT1428-666
NT1428-667

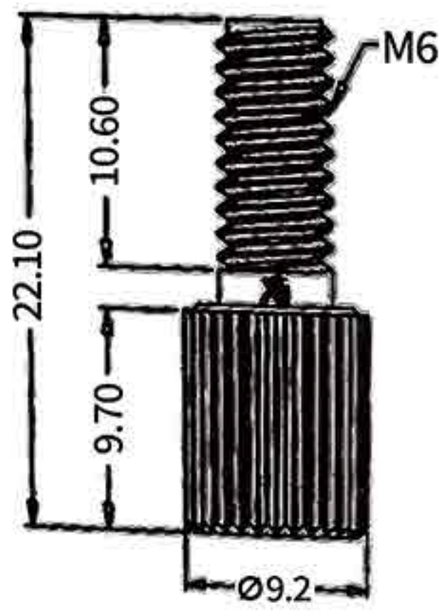

NTM6-651 NTM6-652
NTM6-653 NTM6-654
NTM6-655

UNIT: mm

Extended specification sheet

P/N	TYPE	THREAD SIZE	MATERIAL	COLOR	OUTER DIAMETER OF PIPE	MPQ	INSTALLATIONG METHOD	
NT1428-661	standard type	1/4-28UNF	PEEK	true colors	1/16", 1.6mm, 2mm	10/PCS	manual	torque batch
NT1428-662	standard type	1/4-28UNF	PP	black	1/16", 1.6mm, 2mm	10/PCS	manual	torque batch
NT1428-663	standard type	1/4-28UNF	PEEK	true colors	3/32", 2.5mm	10/PCS	manual	torque batch
NT1428-664	standard type	1/4-28UNF	PP	dark grey	3/32", 2.5mm	10/PCS	manual	torque batch
NT1428-665	standard type	1/4-28UNF	PEEK	true colors	3mm，1/8"，3.2mm	10/PCS	manual	torque batch
NT1428-666	standard type	1/4-28UNF	POM	white	3mm，1/8"，3.2mm	10/PCS	manual	torque batch
NT1428-667	standard type	1/4-28UNF	PPS	true colors	3mm，1/8"，3.2mm	10/PCS	manual	torque batch
NTM6-651	standard type	M6	PEEK	true colors	1/16", 1.6mm, 2mm	10/PCS	manual	torque batch
NTM6-652	standard type	M6	PP	dark grey	1/16", 1.6mm, 2mm	10/PCS	manual	torque batch
NTM6-653	standard type	M6	PEEK	true colors	3/32"2.5mm,3mm,1/8"	10/PCS	manual	torque batch
NTM6-654	standard type	M6	PP	black	3/32"2.5mm,3mm,1/8"	10/PCS	manual	torque batch
NTM6-655	standard type	M6	PPS	true colors	3/32"2.5mm,3mm,1/8"	10/PCS	manual	torque batch

*Please refer to the measured data as these are recommended values, as they may vary depending on the material and technical hardness of the pipe used at the customer's end.

Snap ring nuts- Standard Series

Standard external dimensions

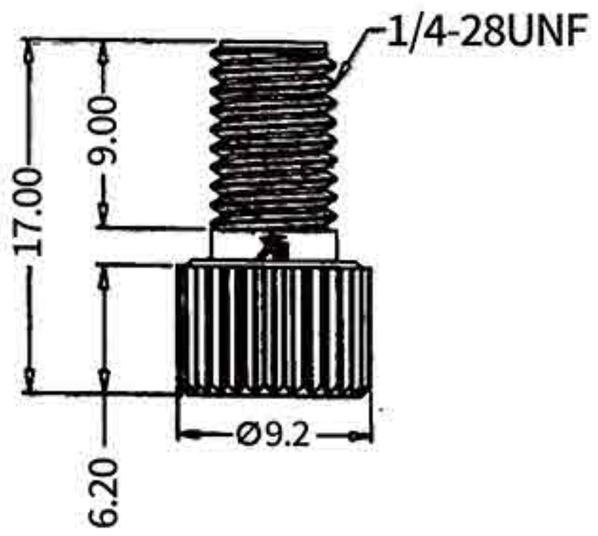

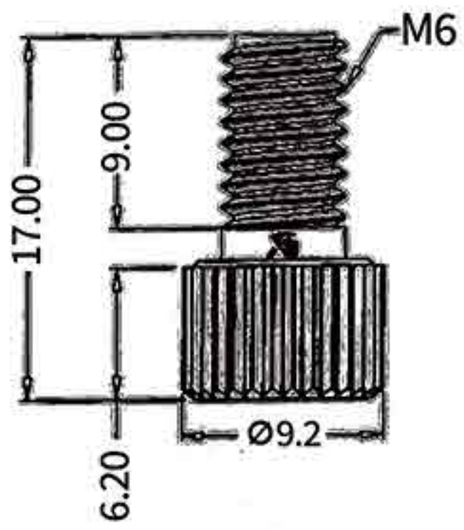

UNIT: mm

NT1428-681 NT1428-682
NT1428-683 NT1428-684
NT1428-685 NT1428-686
NT1428-687

NTM6-671 NTM6-672
NTM6-673 NTM6-674
NTM6-675

Standard specification sheet

P/N	TYPE	THREAD SIZE	MATERIAL	COLOR	OUTER DIAMETER OF PIPE	MPQ	INSTALLATIONG METHOD	
NT1428-681	standard type	1/4-28UNF	PEEK	true colors	1/16", 1.6mm, 2mm	10/PCS	manual	torque batch
NT1428-682	standard type	1/4-28UNF	PP	black	1/16", 1.6mm, 2mm	10/PCS	manual	torque batch
NT1428-683	standard type	1/4-28UNF	PEEK	true colors	3/32", 2.5mm	10/PCS	manual	torque batch
NT1428-684	standard type	1/4-28UNF	PP	blue	3/32", 2.5mm	10/PCS	manual	torque batch
NT1428-685	standard type	1/4-28UNF	PEEK	true colors	3mm，1/8"，3.2mm	10/PCS	manual	torque batch
NT1428-686	standard type	1/4-28UNF	POM	red	3mm，1/8"，3.2mm	10/PCS	manual	torque batch
NT1428-687	standard type	1/4-28UNF	PPS	true colors	3mm，1/8"，3.2mm	10/PCS	manual	torque batch
NTM6-671	standard type	M6	PEEK	true colors	1/16", 1.6mm, 2mm	10/PCS	manual	torque batch
NTM6-672	standard type	M6	PP	blue	1/16", 1.6mm, 2mm	10/PCS	manual	torque batch
NTM6-673	standard type	M6	PEEK	true colors	3/32"2.5mm,3mm,1/8"	10/PCS	manual	torque batch
NTM6-674	standard type	M6	PP	black	3/32"2.5mm,3mm,1/8"	10/PCS	manual	torque batch
NTM6-675	standard type	M6	PPS	true colors	3/32"2.5mm,3mm,1/8"	10/PCS	manual	torque batch

*Please refer to the measured data as these are recommended values, as they may vary depending on the material and technical hardness of the pipe used at the customer's end.

Luer Connector Series

External Dimensions
Material PC

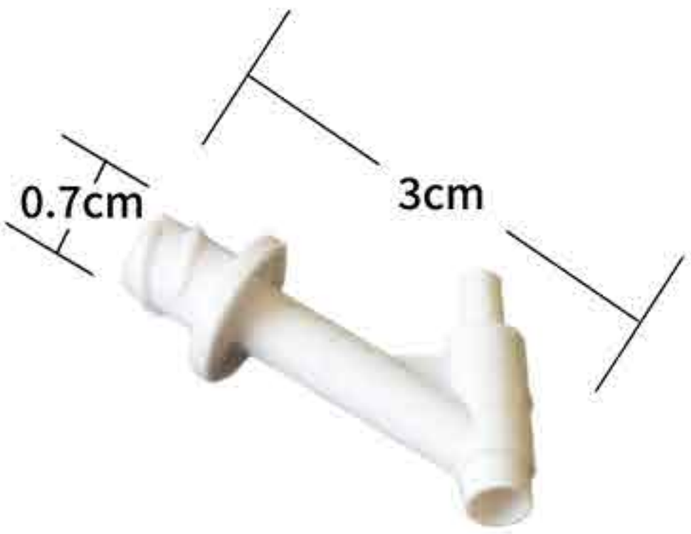

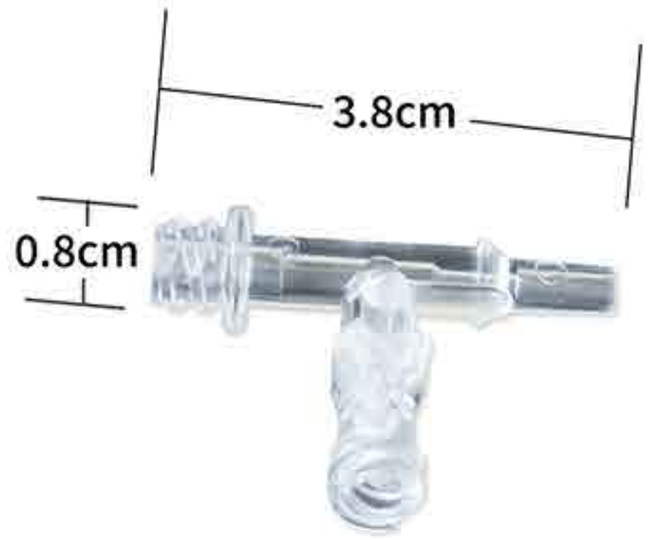

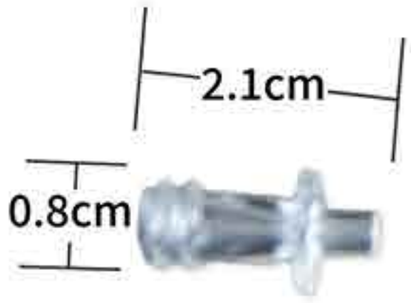

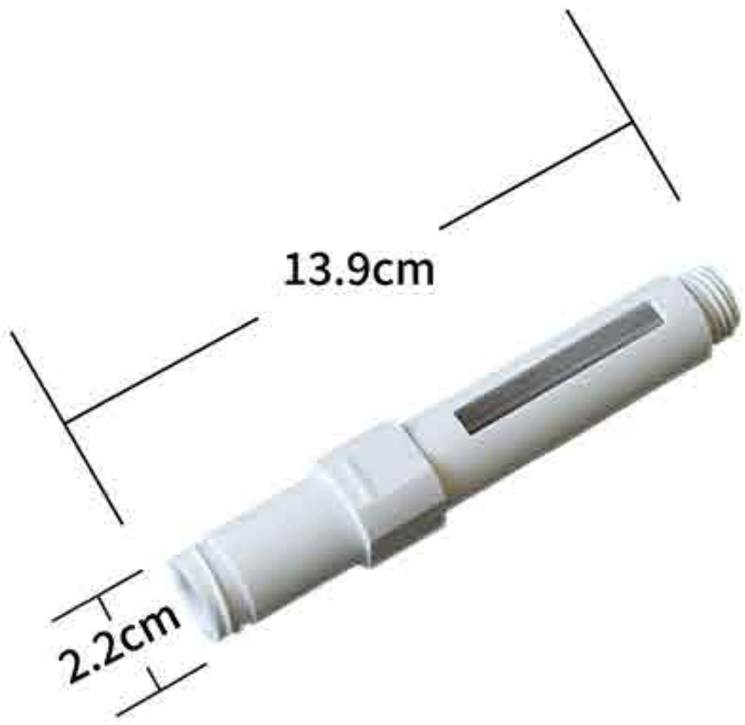

Protect health with technology and improve healthcare equality

CN(企业微信)

EN（WhatsApp）

：www.ablemedicaldevice.com.cn

：+86 188 2025 7979

：Musk.lyu@kanougroup.com

：广东省东莞市松山湖园区晨夕路1号24栋901室

：www.ablemedicaldevice.com

：+ 86 173 2215 6162

：linna@ablemedicaldevice.com

：Room 901, Building 2, No.1 Chenxi RoadSongshan Lake Park,Dongguan city, Guangdong Province，China. Post code 523799